Haier

7,1 kW

Please see pages 40 & 41
For Controller Options

NEW ROUND FLOW CASSETTE











- Low noise level
- 8 ways airflow
- Integrated Wi-Fi control
- UVC Sterilisation

- 'Fresh air' knockout is incorporated in the chassis to allow fresh air introduction of up to 20% of nominal unit air flow without compromising the cooling capacity. More than 20% of the air conditioner's thermal cooling capacity is penalised.

INDOOR UNIT	Model		AB71S2SG1FA(H)
Performance data			
Output power - COOLING	nom (min-max)	kW	7,10
Output power - HEATING	nom (min-max)	kW	8,00
Power supply		Ph/V/Hz	1/220~240/50/60
Treated air volume	(H/M/L/Q)	m3/h	1260/1070/820/680
Indoor Unit			
High sound power		dB	55
Sound pressure		dB(A)	42/40/38/35
Net dimensions	WxDxH	mm	840x840x204
Packaging dimensions	WxDxH	mm	990x990x310
Net/gross weight		kg	27,0/32,0
Installation data			
Liquid pipe	Ø	mm (inch)	9,52 (3/8)
Gas pipe	Ø	mm (inch)	15,88 (5/8)
Panel	Model		PB-950KB(H)
Panel Net dimensions	WxDxH	mm	950x950x50
Panel Packaging dimensions	WxDxH	mm	1013x1025x123
Panel Net/gross weight		kg	6,5/9,5

AB71

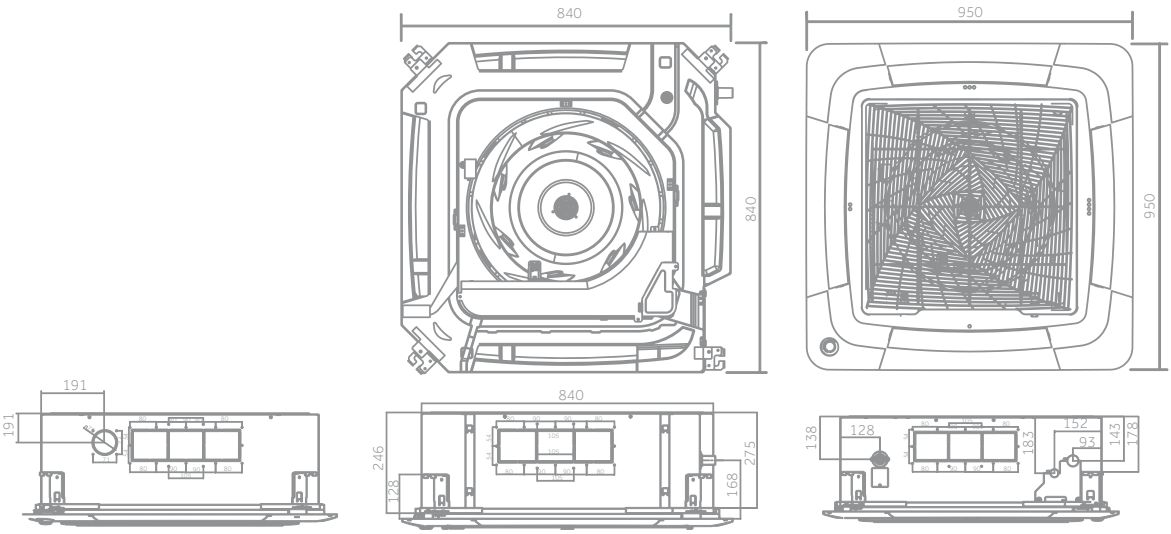

The data in this catalogue is purely indicative as the data may vary. Please be advised to check the accuracy of the data with the supplier before purchasing products.