Haier

DUCTED MEDIUM PRESSURE

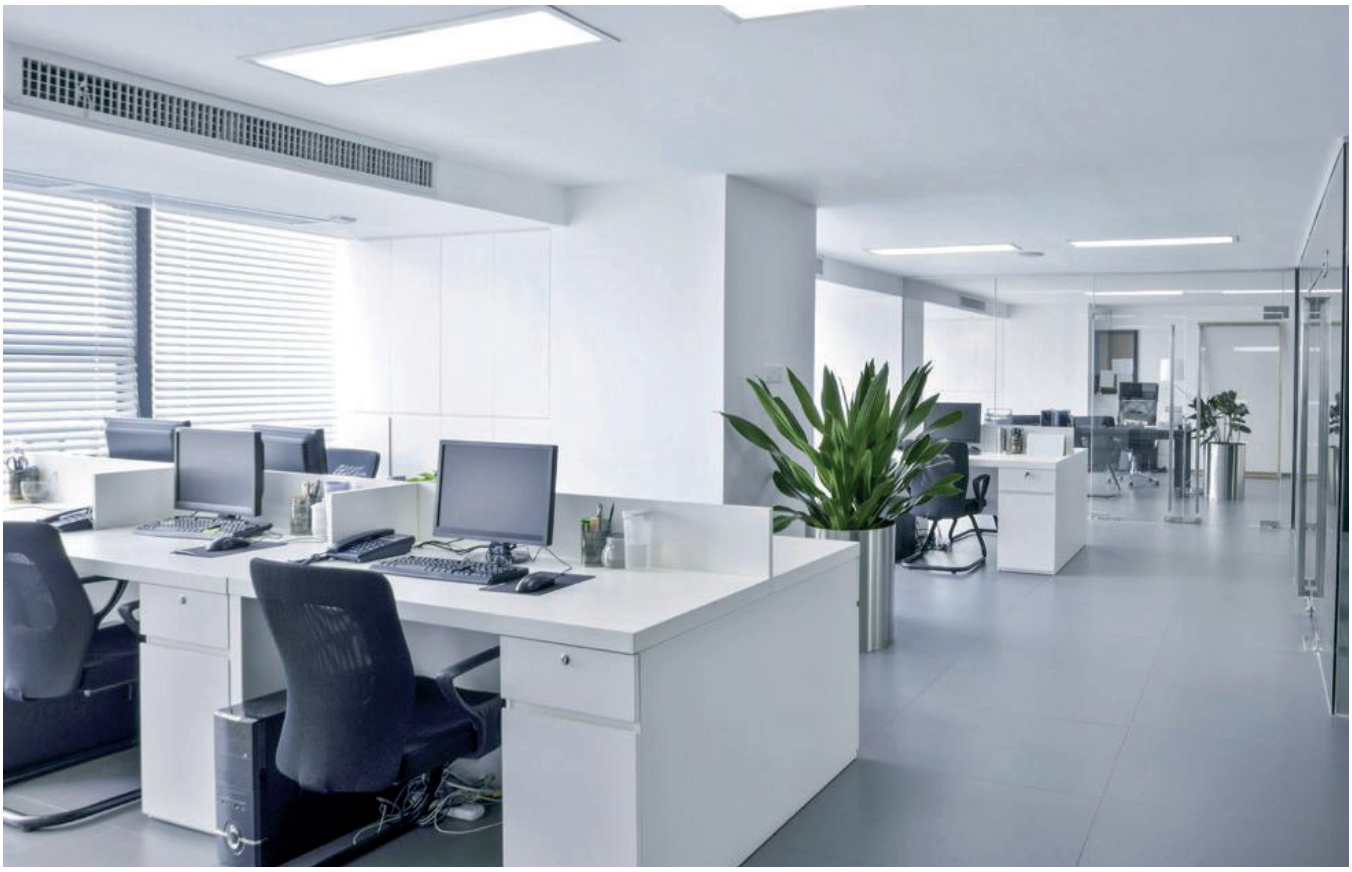



The data in this catalogue is purely indicative as the data may vary.
Please be advised to check the accuracy of the data with the supplier before purchasing products.

COMPACT DESIGN

The unit has a thickness of 248 mm which allows better adaptation and ease of installation.

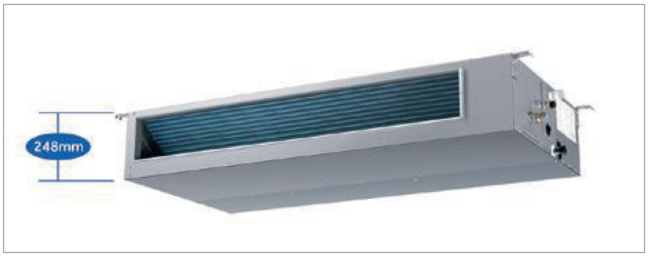

CONDENSATE DRAIN

The medium-pressure ducted unit includes a condensate drain pump as standard. This guarantees a maximum prevalence of 600 mm measured from the base of the machine. There is the possibility of performing condensate drain by gravity (reversible on both sides).

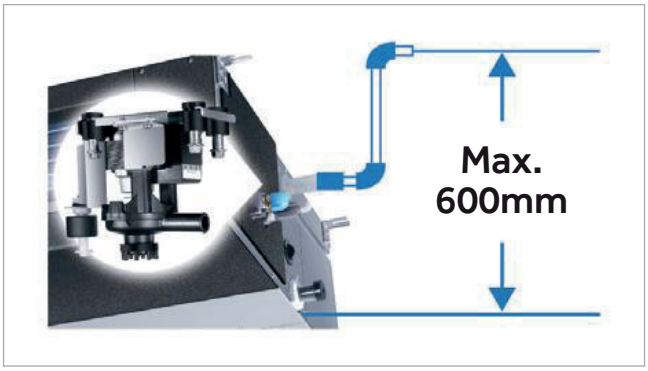

EASY INSTALLATION

- The connection of electrical cables is now possible through only one screw.
- The ducted units have two options for connecting the air extraction channel: rear or lower.



WI-FI

Besides normal wired/infrared control, Haier supplies Smart Control from the hOn APP. This includes on/off. Operation mode selection, fan speed temperature, and air flow adjustment, schedule, UV function and steri-clean 56°C.



FRESH AIR

Air exchange allows the introduction of clean air into the room.

UVC STERILISATION

The built-in LED UV lights kill airborne hazards when the air circulates from the air inlet, ensuring the air out is clean.



FLEXIBLE AIR DISTRIBUTION

The ducted units satisfy multiple installation solutions (circular or rectangular channels).

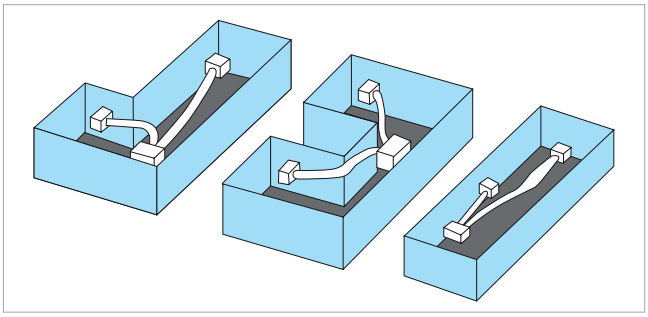

The data in this catalogue is purely indicative as the data may vary.
Please be advised to check the accuracy of the data with the supplier before purchasing products.

Haier

NEW

DUCTED MEDIUM PRESSURE

A++ A+++ ↑ D

- 3,5 kW
- 5,0 kW
- 7,1 kW
- 10,5 kW
- 12,5 kW
- 13,4 kW
- 14,0 kW
- 16,0 kW

hOn

Integrated Wi-Fi Control

Unit R32 compatible R410A



Recommended controls
HW-BA101ABT or HW-SA301AFK

Please see pages 31 & 32 For Controller Options



Designed for ultimate flexibility, this compact unit (just 248mm high) can fit in low ceiling spaces and offers dual air return options (rear or bottom) for adaptable installation. With 150Pa max ESP and left/right drain outlets, setup is effortless. The built-in 1000mm lift drain pump and 2-screw access panel simplify maintenance, while Air Guard technology delivers 99.9% antibacterial filtration and UVC sterilization for purified air. Wi-Fi control via hOn App and optional fresh-air intake make this a smart, hygienic solution.

KEY FEATURES



Silence

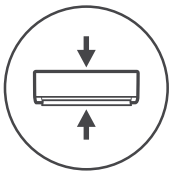

Compact Design



Condensate Drain Pump



Flexible Installation



UVC Sterilisation

The data in this catalogue is purely indicative as the data may vary.
Please be advised to check the accuracy of the data with the supplier before purchasing products.

MODEL	Indoor NEW		AD35S2SM9FA(H)	AD50S2SM9FA(H)	AD71S2SM9FA(H)
	Outdoor		1U35S2SM1FA-2	1U50S2SJ2FA-2	1U71S2ST1FA
Performance data					
Output power - COOLING	nom (min-max)	kW	3,5 (0,9~4,5)	5,0 (1,8~6,0)	7,1 (2,0~7,3)
Output power - HEATING	nom (min-max)	kW	4,0 (1,0~4,8)	6,0 (2,0~6,2)	7,6 (2,5~8)
Absorbed power – COOLING	nom (min-max)	kW	1,08 (0,28~1,80)	1,55 (0,55~2,00)	2,08 (0,5~2,6)
Absorbed power – HEATING	nom (min-max)	kW	1,08 (0,28~1,80)	1,48 (0,60~2,00)	2,00 (0,5~2,6)
Energy class	EER	W/W	3,23	3,42	3,01
	COP	W/W	3,71	3,8	3,5
COOLING Pdesign	35 °C	kW	3,5	5,0	6,8
HEATING Pdesign	(-10 °C)	kW	2,7	4,5	5
Energy class	SEER		6,10 (A++)	6,10 (A++)	6,83 (A++)
	SCOP		4,00 (A+)	4,00 (A+)	4,25 (A+)
Annual Energy Consumption - COOLING		kWh/a	215	291	406
Annual Energy Consumption - HEATING		kWh/a	1020	1782	1831
Indoor Unit					
Power supply		Ph/V/Hz	1/220~240/50/60	1/220~240/50/60	1/220~240/50/60
Treated air volume	H/M/L/Q	m3/h	840/720/600/450	1020/900/780/550	1440/1260/1100/900
External static pressure		L/h	25(default)/37/50/70/90/100/110/120/130/150		
High sound power		dB	55	56	60
Sound pressure		dB(A)	41/35/28/26	43/37/30/28	44/41/39/36
Net dimensions	WxDxH	mm	700x700x248	1100x700x248	1100x700x248
Packaging dimensions	WxDxH	mm	914x866x318	1316x866x318	1316x866x318
Net/gross weight		kg	26,0/30,0	31,0/35,0	31,0/35,0
Outdoor Unit					
Power supply		Ph/V/Hz	1/220~240/50	1/220~240/50	1/220~240/50/60
Power cable		N x mm2	3 x 1,5	3 x 1,5	3 x 4,0
Interconnection cable		N x mm2	4 x 1,0	4 x 1,0	4 x 2,5
Sound power	H	dB	61	63	68
Sound pressure	H	dB(A)	48	51	54
Running current cooling/heating	Max	A	8,0	10,68	13,1
Starting current cooling/heating	Max	A	2,0	2,0	2,0
Net dimensions	WxDxH	mm	800x275x553	820x305x643	890x340x705
Packaging dimensions	WxDxH	mm	902x375x605	940x390x697	1046x460x780
Net/gross weight		kg	30,0/32,9	35,7/38,5	44,0/48,0
Compressor type			Rotary inverter	Rotary inverter	Twin rotary inverter
Installation data					
Refrigerant			R32	R32	R32
Liquid pipe	Ø	mm (inch)	6,35 (1/4)	6,35 (1/4)	9,52 (3/8)
Gas pipe	Ø	mm (inch)	9,52 (3/8)	12,70 (1/2)	15,88 (5/8)
Standard pipe length without refrigerant charge		m	7	7	10
Maximum pipe length		m	20	25	50
Maximum IU - OU elevation		m	10	15	30
Refrigerant charge in the factory		kg	0,78	1,10	1,23
Refrigerant charge in the factory		TCO2eq	0,53	0,74	0,88
Additional ref. charge over std length		g/m	20	20	45
Operating limits - COOLING (in/out)	min-max	°C	-20~43	-20~43	-20~46
Operating limits - HEATING (in/out)	min-max	°C	-20~24	-20~24	-20~24

Additional technical specifications on next page →

The data in this catalogue is purely indicative as the data may vary.
Please be advised to check the accuracy of the data with the supplier before purchasing products.

Haier

NEW

DUCTED MEDIUM PRESSURE



MODEL	Indoor NEW		AD105S2SM9FA(H)	AD105S2SM9FA(H)	AD125S2SM9FA(H)	AD125S2SM9FA(H)
	Outdoor		1U105S2SS2FA	1U105S2SS1FB	1U125S2SN2FA	1U125S2SN2FB
Performance data						
Output power - COOLING	nom (min-max)	kW	9,5 (2,5~10,0)	9,5 (2,5~10,0)	12,3 (3,0~13,0)	12,4 (3,0~13,0)
Output power - HEATING	nom (min-max)	kW	10,2 (3,0~10,5)	10,5 (3,0~11)	12,7 (3,5~13,5)	12,8 (3,5~13,5)
Absorbed power – COOLING	nom (min-max)	kW	3,16 (0,5~4,0)	3,27 (0,5~4,0)	4,6 (1,0~6,0)	4,51 (1,0~6,0)
Absorbed power – HEATING	nom (min-max)	kW	2,91 (0,5~4,0)	3,00 (0,5~4,0)	3,93 (1,0~6,0)	3,87 (1,0~6,0)
Energy class	EER	W/W	3,01	2,9	2,67	2,75
	COP	W/W	3,5	3,5	3,23	3,31
COOLING Pdesign	35 °C	kW	9,5	9,5	12,3	12,4
HEATING Pdesign	(-10 °C)	kW	7,2	6	8	8
Energy class	SEER		6,10 (A++)	6,00 (A+)	5,72 (A+)	5,85 (A+)
	SCOP		3,80 (A)	3,91 (A)	3,93 (A)	3,96 (A)
Annual Energy Consumption - COOLING		kWh/a	544	569	735	718
Annual Energy Consumption - HEATING		kWh/a	2792	2094	3032	3003
Indoor Unit						
Power supply		Ph/V/Hz	1/220~240/50/60	1/220~240/50/60	1/220~240/50/60	1/220~240/50/60
Treated air volume	H/M/L/Q	m3/h	1600/1480/1360/1240	1600/1480/1360/1240	2250/1960/1680/1500	2250/1960/1680/1500
External static pressure		Pa	25/37(default)/50/70/90/100/110/120/130/150			
High sound power		dB	61	61	65	65
Sound pressure		dB(A)	47/44/40/37	47/44/40/37	48/45/42/39	48/45/42/39
Net dimensions	WxDxH	mm	1100x700x248	1100x700x248	1500x700x248	1500x700x248
Packaging dimensions	WxDxH	mm	1316x866x318	1316x866x318	1711x870x325	1711x870x325
Net/gross weight		kg	38,0/42,0	38,0/42,0	48,0/57,0	48,0/57,0
Outdoor Unit						
Power supply		Ph/V/Hz	1/220~240/50/60	3/380~415/50/60	1 /220~240/ 50/60	3 /380~415/ 50/60
Power cable		N x mm2	3 x 4,0	5 x 4,0	3 x 6,0	5 x 4,0
Interconnection cable		N x mm2	4 x 2,5	4 x 2,5	4 x 2,5	4 x 2,5
Sound power	H	dB	66	68	72	72
Sound pressure	H	dB(A)	53	54	58	58
Running current cooling/heating	Max	A	16,5	6,8	26,0	10,0
Starting current cooling/heating	Max	A	3,0	1,0	4,0	2,0
Net dimensions	WxDxH	mm	920x372x765	920x372x765	950x370x965	950x370x965
Packaging dimensions	WxDxH	mm	1036x478x820	1085x485x830	1050x485x1130	1050x485x1130
Net/gross weight		kg	60,0/65,0	61,0/66,0	84,0/89,0	85,0/90,0
Compressor type			Twin rotary inverter	Twin rotary inverter	Twin rotary inverter	Twin rotary inverter
Installation data						
Refrigerant			R32	R32	R32	R32
Liquid pipe	Ø	mm (inch)	9,52 (3/8)	9,52 (3/8)	9,52 (3/8)	9,52 (3/8)
Gas pipe	Ø	mm (inch)	15,88 (5/8)	15,88 (5/8)	15,88 (5/8)	15,88 (5/8)
Standard pipe length without refrigerant charge		m	30	30	30	30
Maximum pipe length		m	50	50	50	50
Maximum IU - OU elevation		m	30	30	30	30
Refrigerant charge in the factory		kg	1,70	1,70	2,30	2,30
Refrigerant charge in the factory		TCO2eq	1,15	1,15	1,55	1,55
Additional ref. charge over std length		g/m	45	45	45	45
Operating limits - COOLING (in/out)	min-max	°C	-20~46	-20~46	-20~46	-20~46
Operating limits - HEATING (in/out)	min-max	°C	-20~24	-20~24	-20~24	-20~24

The data in this catalogue is purely indicative as the data may vary.
Please be advised to check the accuracy of the data with the supplier before purchasing products.

	AD140S2SM9FA(H)	AD140S2SM9FA(H)	AD140S2SM9FA(H)	AD140S2SM9FA(H)	AD160S2SM9FA(H)
	1U140S2SN1FA	1U140S2SN1FB	1U140S2SP2FA	1U140S2SP2FB	1U160S2SP1FB
	13,4 (3,5~14,0)	13,4 (3,5~14,0)	13,4 (4,0~15,0)	13,4 (4,0~15,0)	16,0 (4,5~16,5)
	15,0 (4,0~15,5)	15,0 (4,0~15,5)	15,0 (4,5~16,0)	15,0 (4,5~16,0)	17,0 (5,0~18,0)
	5,28 (1,0~6,5)	5,18 (1,0~6,5)	4,14 (1,0~6,0)	4,15 (1,0~6,0)	5,48 (1,0~6,5)
	4,92 (1,0~6,5)	4,79 (1,0~6,5)	4,03 (1,0~6,0)	4,02 (1,0~6,0)	4,82 (1,0~6,5)
	2,54	2,59	3,24	3,23	2,92
	3,05	3,13	3,72	3,73	3,53
	13,4	13,4	13,4	13,4	16
	8,5	8,5	11	11	11
	5,62 (A+)	5,64 (A+)	6,16 (A++)	6,19 (A++)	5,94 (A+)
	3,93 (A)	3,96 (A)	4,06 (A+)	4,06 (A+)	4,06 (A+)
	835	832	761	758	943
	3032	3003	3796	3798	3798
	1/220~240/50/60	1/220~240/50/60	1/220~240/50/60	1/220~240/50/60	1/220~240/50/60
	2500/2160/1780/1500	2500/2160/1780/1500	2500/2160/1780/1500	2500/2160/1780/1500	2500/2160/1780/1500
	25/37(default)/50/70/90/100/110/120/130/150				
	66	66	66	66	67
	48/45/42/39	48/45/42/39	48/45/42/39	48/45/42/39	48/45/42/39
	1500x700x248	1500x700x248	1500x700x248	1500x700x248	1500x700x248
	1711x870x325	1711x870x325	1711x870x325	1711x870x325	1711x870x325
	48,0/57,0	48,0/57,0	48,0/57,0	48,0/57,0	48,0/57,0
	1 /220~240/ 50/60	3 /380~415/ 50/60	1/220~240/50/60	3/380~415/50/60	3/380~415/50/60
	3 x 6,0	5 x 4,0	3 x 6,0	5 x 4,0	5 x 4,0
	4 x 2,5	4 x 2,5	4 x 2,5	4 x 2,5	4 x 2,5
	72	72	70	70	72
	58	58	53	53	58
	30,0	10,0	32,0	10,0	10,0
	5,0	2,0	6,0	2,0	2,0
	950x370x965	950x370x965	950x370x1350	950x370x1350	950x370x1350
	1050x485x1130	1050x485x1130	1050x485x1500	1050x485x1500	1050x485x1500
	84,0/89,0	85,0/90,0	105,0/118,0	101,0/116,0	101,0/116,0
	Twin rotary inverter	Twin rotary inverter	Twin rotary inverter	Twin rotary inverter	Twin rotary inverter
	R32	R32	R32	R32	R32
	9,52 (3/8)	9,52 (3/8)	9,52 (3/8)	9,52 (3/8)	9,52 (3/8)
	15,88 (5/8)	15,88 (5/8)	15,88 (5/8)	15,88 (5/8)	19,05 (3/4)
	30	30	30	30	30
	70	70	70	70	70
	30	30	30	30	30
	2,30	2,30	2,90	3,50	3,50
	1,55	1,55	1,96	2,36	2,36
	45	45	45	45	60
	-20~46	-20~46	-20~46	-20~46	-20~46
	-20~24	-20~24	-20~24	-20~24	-20~24

The data in this catalogue is purely indicative as the data may vary.
Please be advised to check the accuracy of the data with the supplier before purchasing products.