NEW CASSETTE 620





AB35 - AB50

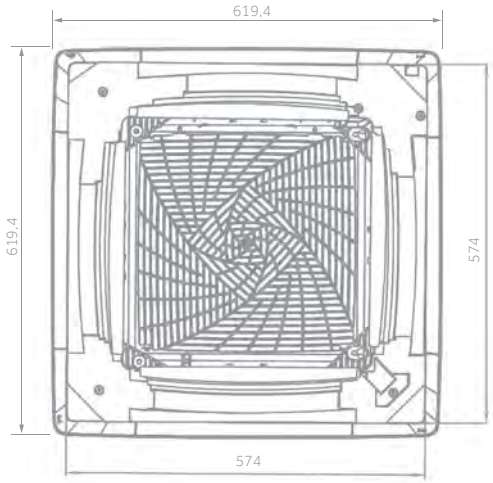

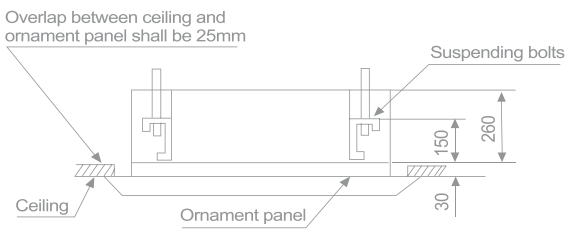

1U35

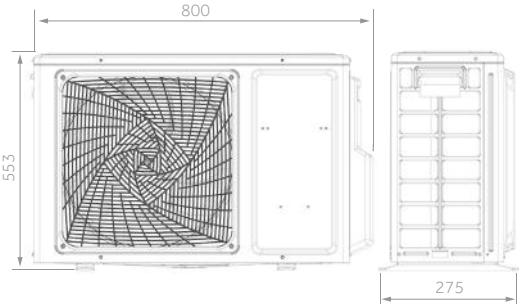

1U50

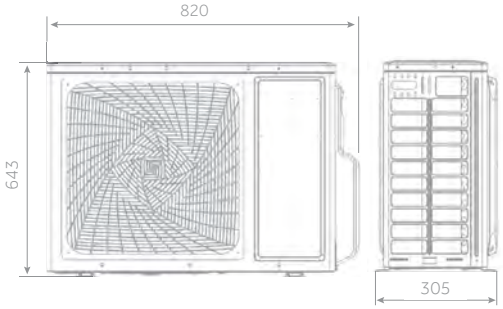



3,5 kW



5,0 kW

The data in this catalogue is purely indicative as the data may vary. Please be advised to check the accuracy of the data with the supplier before purchasing products.

CASSETTE 620 NEW

3,5 kW

5,0 kW

OPTIONAL CONTROL





Silence


4way Independent



Wi-Fi control integrated


Fresh Air

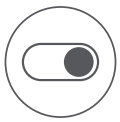
On-Off Card



UVC Sterilisation



- Low noise level
- Wi-Fi control integrated
- 'Fresh air' knockout is incorporated in the chassis to allow fresh air introduction of up to 20% of nominal unit air flow without compromising the cooling capacity.
- On-Off card

INDOOR UNIT	Model		AB35S2SC2FA(H)	AB50S2SC2FA(H)
OUTDOOR UNIT	Model		1U35S2SM1FA-2	1U50S2SJ2FA-2
Performance data				
Output power - COOLING	nom (min-max)	kW	3,50 (0,90-4,50)	5,00 (1,80-5,80)
Output power - HEATING	nom (min-max)	kW	4,00 (1,00-4,80)	5,50 (2,00-6,50)
Absorbed power – COOLING	nom (min-max)	kW	1,06 (0,28-1,80)	1,53 (0,55-2,00)
Absorbed power – HEATING	nom (min-max)	kW	1,08 (0,28-1,80)	1,52 (0,60-2,00)
Energy class	EER	W/W	3,31	3,26
	COP	W/W	3,71	3,42
COOLING Pdesign	35 °C	kW	3,50	5,00
HEATING Pdesign	(-10 °C)	kW	3,00	4,00
Energy class	SEER		6,10 (A++)	6,10 (A++)
	SCOP		3,80 (A)	4,00 (A+)
Annual Energy Consumption - COOLING		kWh/a	222	363
Annual Energy Consumption - HEATING		kWh/a	1427	1932
Indoor Unit				
Power supply		Ph/V/Hz	1/220~240/50/60	1/220~240/50/60
Treated air volume	(H/M/L/Q)	m3/h	620/520/450/350	700/620/500/400
High sound power		dB	52	55
Sound pressure		dB(A)	36/33/30/27	42/37/35/32
Net dimensions	WxDxH	mm	570x570x260	570x570x260
Packaging dimensions	WxDxH	mm	718x680x380	718x680x380
Net/gross weight		kg	18,5/22,0	19,0/22,0
Panel	Model		PB-620KB(H)	PB-620KB(H)
Panel Net dimensions			620x620x60	620x620x60
Panel Packaging dimensions			660x660x115	660x660x115
Panel Net/gross weight			2,8/4,5	2,8/4,5
Outdoor Unit				
Power supply		Ph/V/Hz	1/220~240/50	1/220~240/50
Power cable		N x mm2	3 x 1,5	3 x 1,5
Interconnection cable		N x mm2	4 x 1,0	4 x 1,0
Sound power	H	dB	61	63
Sound pressure	H	dB(A)	48	50
Running current cooling/heating	Max	A	8,0	10,68
Starting current cooling/heating	Max	A	2,0	2,0
Net dimensions	WxDxH	mm	800x275x553	820x305x643
Packaging dimensions	WxDxH	mm	902x375x607	940x390x697
Net/gross weight		kg	30,0/32,9	35,7/38,5
Compressor type			Rotary inverter	Twin rotary inverter
Installation data				
Refrigerant			R32	R32
Liquid pipe	Ø	mm (inch)	6,35 (1/4)	6,35 (1/4)
Gas pipe	Ø	mm (inch)	9,52 (3/8)	12,70 (1/2)
Standard pipe length without refrigerant charge		m	7	7
Maximum pipe length		m	15	25
Maximum IU - OU elevation		m	10	15
Refrigerant charge in the factory		kg	0,78	1,10
Refrigerant charge in the factory		TCO2eq	0,53	0,74
Additional ref. charge over std length		g/m	20	20
Outdoor operating limits -COOLING	min-max	°C	-20~43	
Outdoor operating limits - HEATING	min-max	°C	-20~24	

The data in this catalogue is purely indicative as the data may vary. Please be advised to check the accuracy of the data with the supplier before purchasing products.